Pimpri-Chinchwad Education Trust's
Pimpri-Chinchwad College of Engineering
(An Autonomous Institute)
Affiliated to Savitribai Phule Pune University (SPPU) ISO 21001:2018 Certified by TUV

DEPARTMENT OF INFORMATION TECHNOLOGY

Assignment No. 1

Subject	DBMS Lab
Assignment No.	1
Topic	ER & EER Diagrams
Student Name	Madhav Khobare
Roll Number	124B1F023
Date	27/01/2026
Div & Batch	SY IT A1
Guided by: -	Ms. Alpana A. Borse

Academic Year: 2025-26 Semester: IV

Aim:

To design and analyze ER (Entity Relationship) and EER (Enhanced Entity Relationship) diagrams for real-world database applications.

Objectives:

- To understand the concept of ER and EER models.
- To identify entities, attributes, and relationships in a system.
- To represent database structure using ER diagrams.
- To understand advanced concepts like specialization, generalization, and weak entities in EER.
- To design efficient database models for real-world applications.

Theory: ER and EER Diagrams

The **Entity Relationship (ER) model** is a high-level data model used to describe the structure of a database. It represents entities (objects), attributes (properties), and relationships between entities using graphical notations such as rectangles, ovals, and diamonds.

An **entity** represents a real-world object such as Airline, Passenger, or User. Each entity has attributes that describe its properties. A **primary key** uniquely identifies each record, while a **foreign key** establishes relationships between entities.

Relationships define how entities are connected, such as one-to-one (1:1), one-to-many (1:N), and many-to-many (M:N). In many-to-many relationships, an associative entity (like Booking) is used to resolve the relationship.

The **Enhanced Entity Relationship (EER) model** extends the ER model by including advanced concepts such as specialization, generalization, inheritance, and aggregation. It provides a more detailed and realistic representation of complex systems.

In real-world applications like Airline Management System and Civic Voice Interface System, ER and EER diagrams help in designing structured and efficient databases.

Airplane System

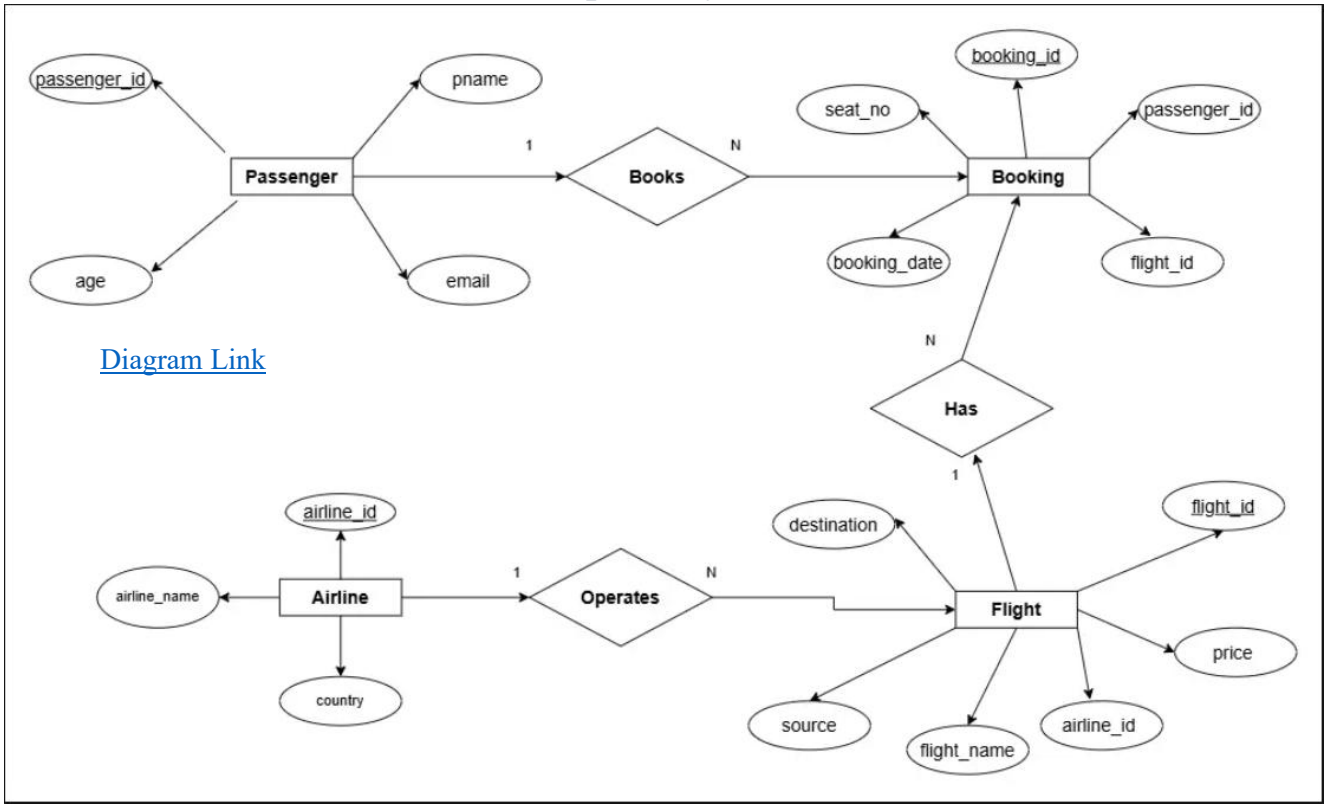

Diagram Link

Civic Voice Interface

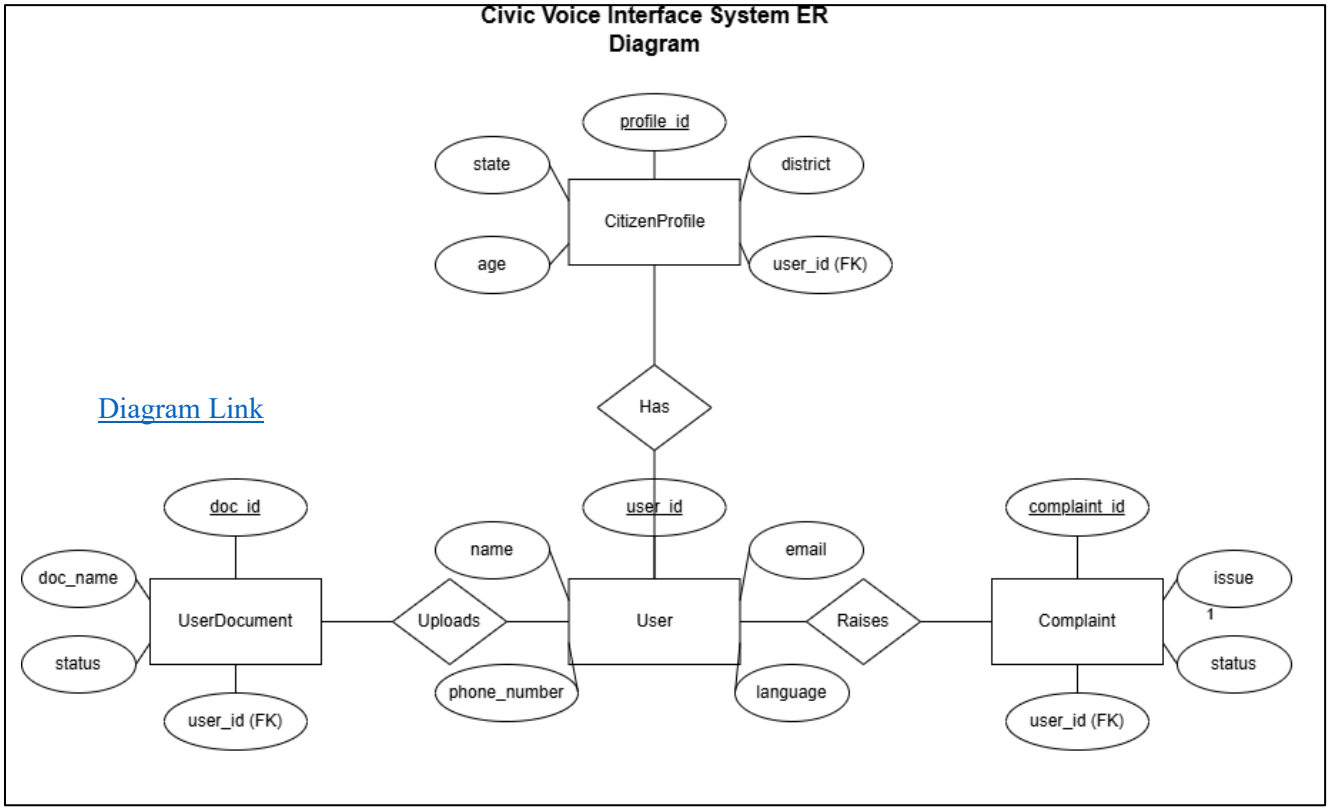

Diagram Link

Conclusion:

In this assignment, ER and EER diagrams were successfully designed for the Airline Management System and Civic Voice Interface System. These diagrams provided a clear and structured representation of entities, attributes, and relationships involved in each system. The use of ER modeling helped in visualizing how different components of the database are interconnected and ensured proper organization of data.

Furthermore, the EER model enhanced the design by introducing advanced concepts such as associative entities, specialization, and improved relationship representation, making the system more realistic and scalable. These diagrams play a vital role in the database design process as they serve as a blueprint for implementation.

Overall, ER and EER diagrams are essential tools for developing efficient, well-structured, and scalable database systems in real-world applications.